Workshop VIII

PCB Design with KiCad

© 2024 Open Project Space, Institute of Electrical and Electronics Engineers at the University of California, Irvine. All Rights Reserved.

Terminology

- **Printed circuit board** (**PCB**) - multiple layers of copper sheets with insulator between them
- **Surface mount device** (**SMD**) - this device does not go through the board, is soldered on one side
- **Through hole technology** (**THT**) - this device has legs that go through the board and are soldered on those legs

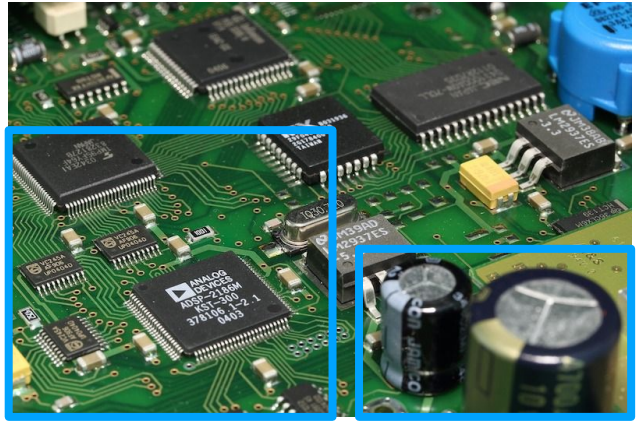

SMD

THT

Terminology (Cont'd)

- **Component** - a physical device that will be placed in the circuits

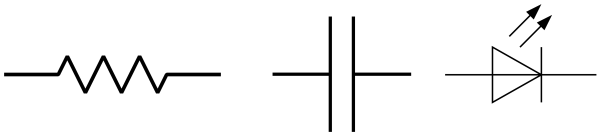

- **Symbol** - a graphic in the schematic that represents a component

Resistor Symbol

- **Footprint** - a map of physical connections for given components on the PCB

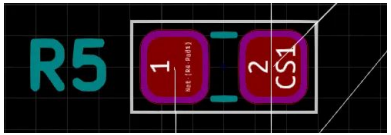

SMD Resistor Footprint

Terminology (Cont'd)

- **Trace** - the PCB analog of a wire, a uniform piece of copper that connects components
- **Via** - a hole with copper inside of it, allows different layers to be connected
- **Net** - the Analog to a Node, a connection between one or more components, usually is named or labelled
- **Fills** - the solid copper areas usually connected to ground

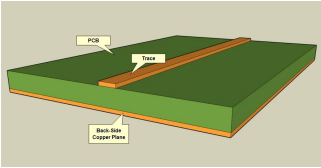

PCB Trace

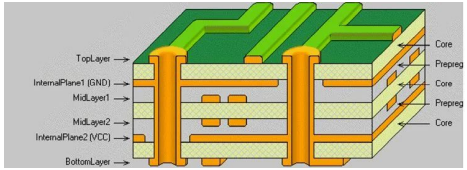

PCB Via

Pros of Prototyping PCBs

- Allows for much **more complex designs** vs breadboard/perfboard design
- Allows you to have **much more reliable** and **stable** connections between parts
- Much **more compact**
- Much **easier to debug**

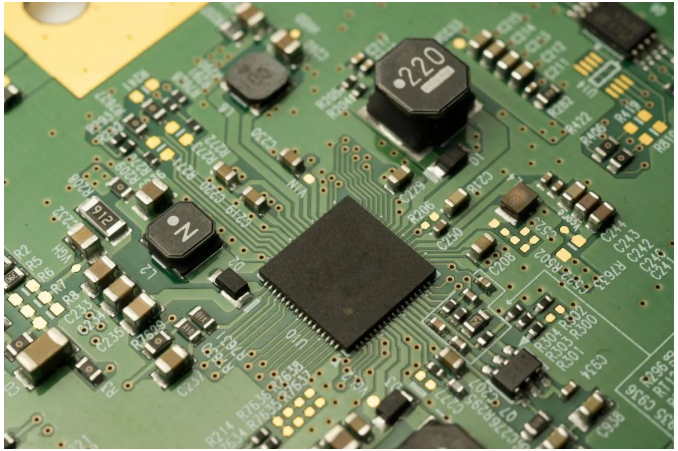

Cons of Prototyping PCBs

- **Design is set in stone**
- Can take **more time** to design and build than breadboarding
- Can be **more expensive**
- Requires **more knowledge**
- Requires a **third-party for manufacturing**

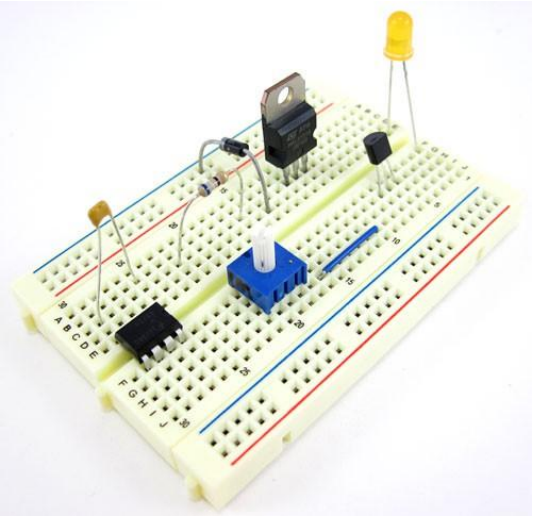

SECTION I

Getting Started

Design Process

1. **Identify the components** and **circuit diagrams** you will use
2. **Schematic capture**
3. **Component placement** and **routing** (PCB Layout)
4. **Verification**
5. **Generate** the **manufacturing files**
6. **Fabricate** the **PCB**

Workshop Objectives

- We will be demonstrating the **entire PCB design process** in KiCAD
- The completed and assembled design will look something like this (reminiscent of a certain project checkpoint a few months ago):

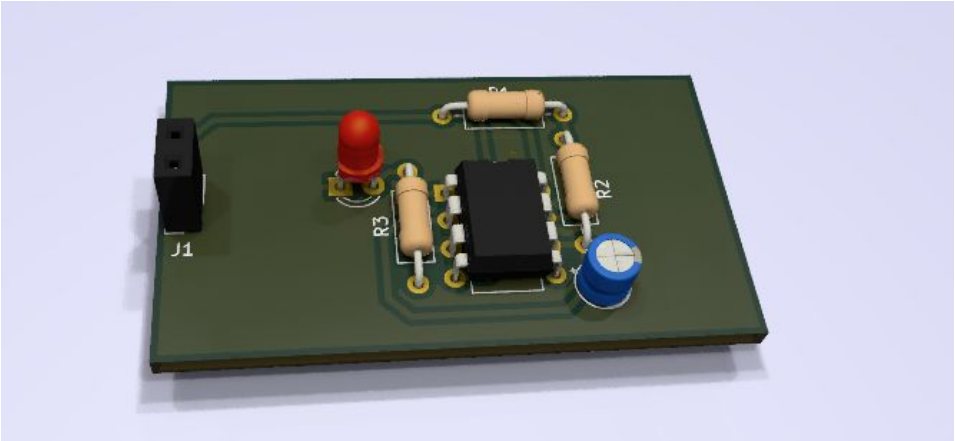

555 Blinker Circuit

Creating a New Project

1. **Open KiCad 9.0** and either press **Ctrl+N (⌘ + N for Mac)** or go to the context menu and select **File→Create New Project**
2. Name your project **“ops_project8_lastname_firstname.kicad_pro”**
3. You will see something like this:

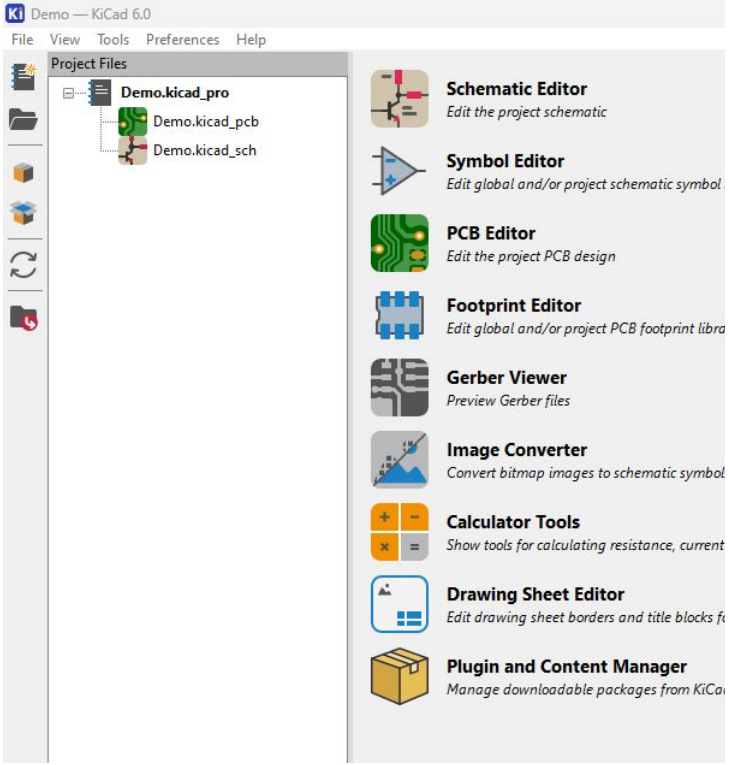

SECTION II

Schematic Capture

Schematic Design Process

1. **Create** and **place all symbols**
2. **Assign footprints** to symbols
3. **Wire the symbols** as desired
4. **Flag all pins that should not be connected**
5. **Label pins and nets** as needed

Schematic Editor

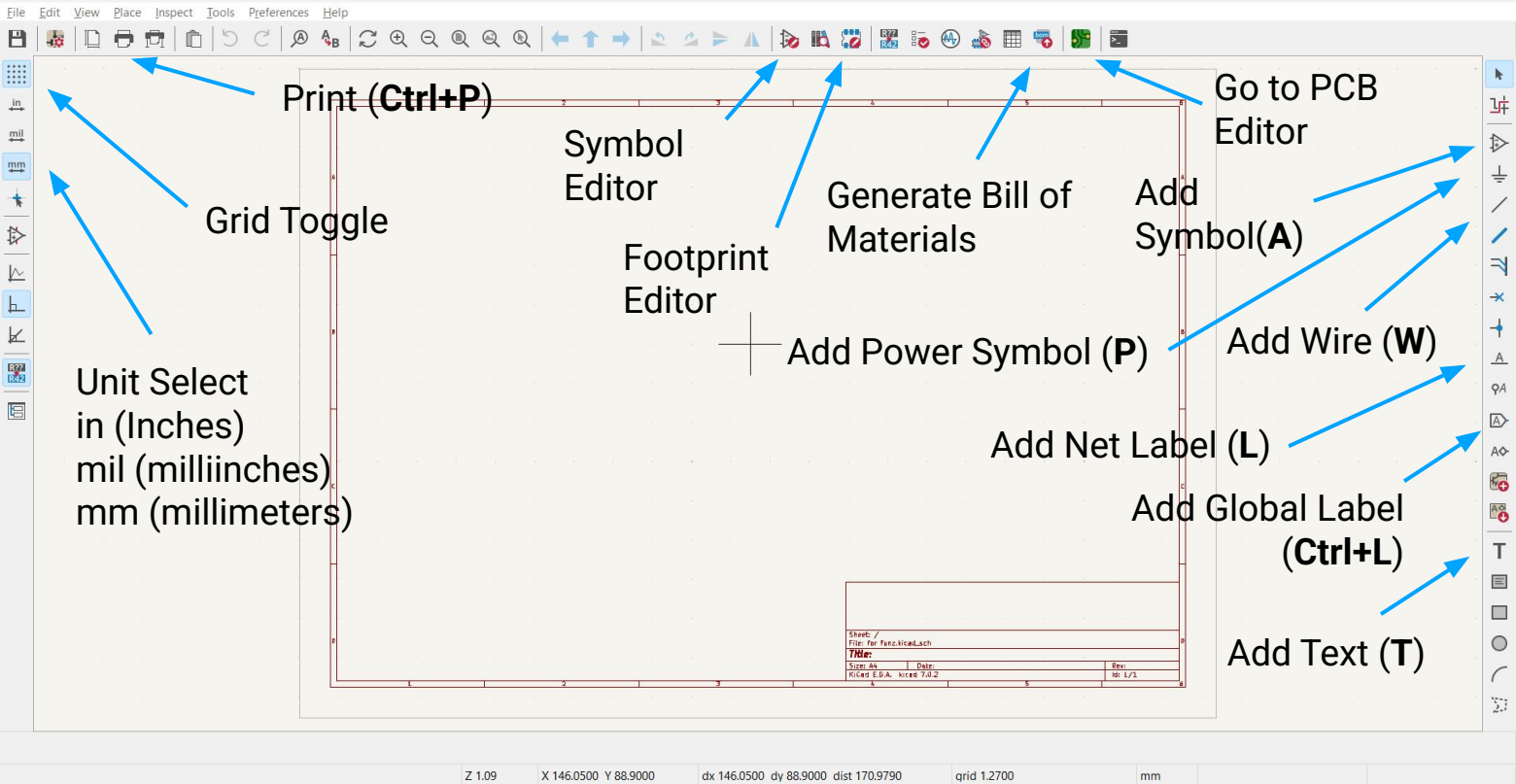

Important Keyboard Shortcuts

M - Move an Object

R - Rotate an Object

X - Mirror an Object horizontally

Y - Mirror an object vertically

W - Add Wire

B - Add Bus

Z - Add Bus Entry

D - Open Datasheet

G - Drag (Interactive Move)

A - Add Symbol

P - Add Power Symbol

Ctrl/⌘+D - Duplicate

L - Add Label

H - Add Hierarchical Label

Ctrl/⌘+L - Add Global Label

Important Keyboard Shortcuts (cont.)

E - Edit Properties

V - Edit Symbol Value

U - Edit Symbol Reference

F - Edit Symbol Footprint

Alt+S - Edit Symbol Properties

Insert - Repeat Last Action (will increment reference name)

Creating a Schematic

- **Objective** - Create a basic blinking LED circuit with an attached battery (using components from prior projects)
- What the completed schematic will look like:

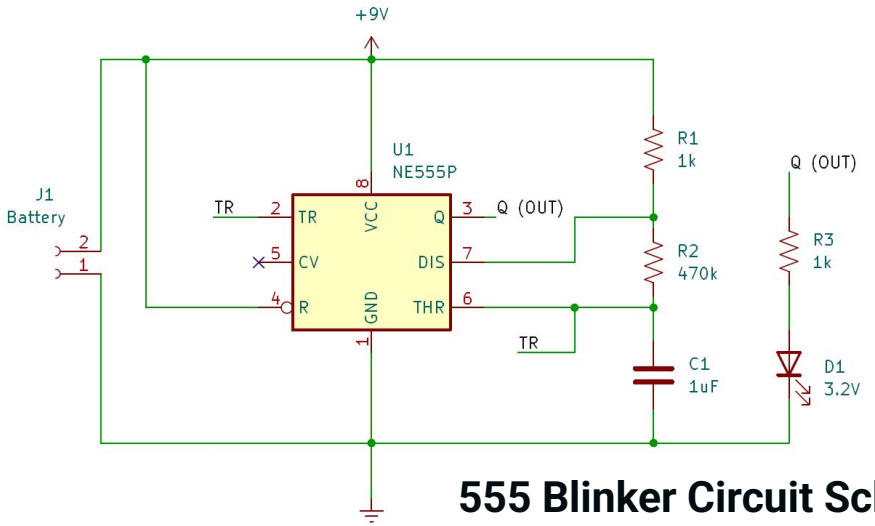

555 Blinker Circuit Schematic

Adding Power Symbols

1. Open up Power Symbol Selector by **pressing P** or navigating to the right toolbar and **clicking the earth symbol**
2. Search for **Earth** (US Ground Symbol) and **VCC**:
3. Add a **VCC** and **GND** Net
4. Place them anywhere in the schematic

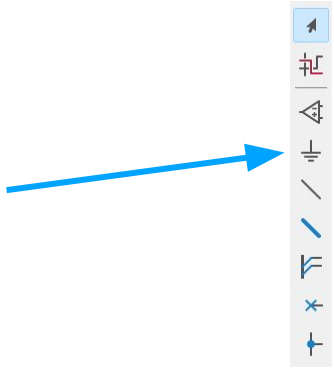

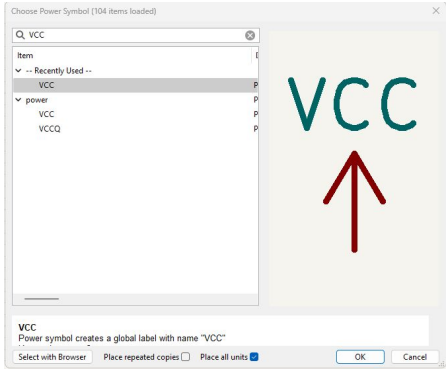

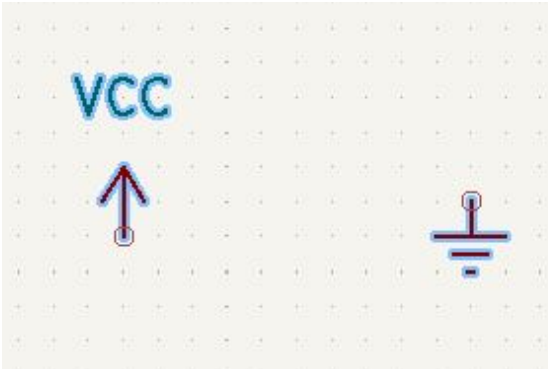

Adding Symbols

1. Press **A** or navigate to the right toolbar and **click the “triangle”** op amp symbol
2. Search in the box for symbols you need (ex. C for Capacitor)
3. Add symbols for **LED**, **R_US** (US Resistor Symbol), **NE555P** (555 Timer), **C** (Capacitor), and a **Conn_01x02_Socket**.
4. Press **OK**, then **place the symbol** anywhere

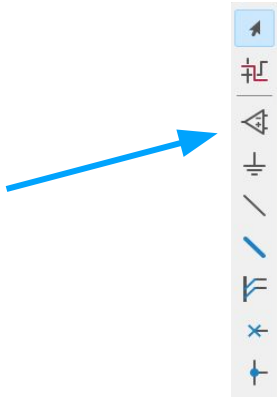

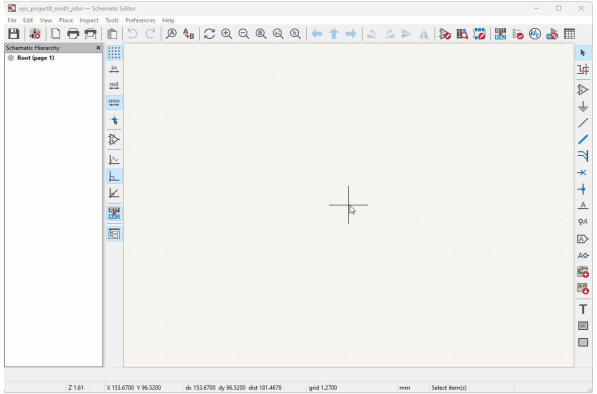

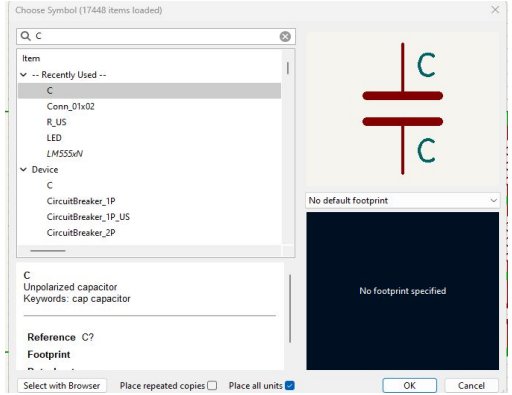

Editing Component Values

1. We want to set the value of the component… this can either be the **name of the component**, **value** (resistance, capacitance, etc…) or a **part number**.
2. Hover over a symbol and **right mouse click on the symbol** then **click Properties** in the popup OR press **E** to edit its properties:
3. We will **set the value** to the desired quantity (1k, 100nF, etc.)

   The **value scheme** is as follows:

   a. {**base value**} {**scale**} {**unit**}

   b. **Scale** (Power of 10): p: -12, n: -9, u: -6, m: -3, k: 3, M: 6, G: 9

   c. **Unit**: Capacitors: F (Farads), Inductors: H (Henries), Resistors: None

Editing Component Values (Window)

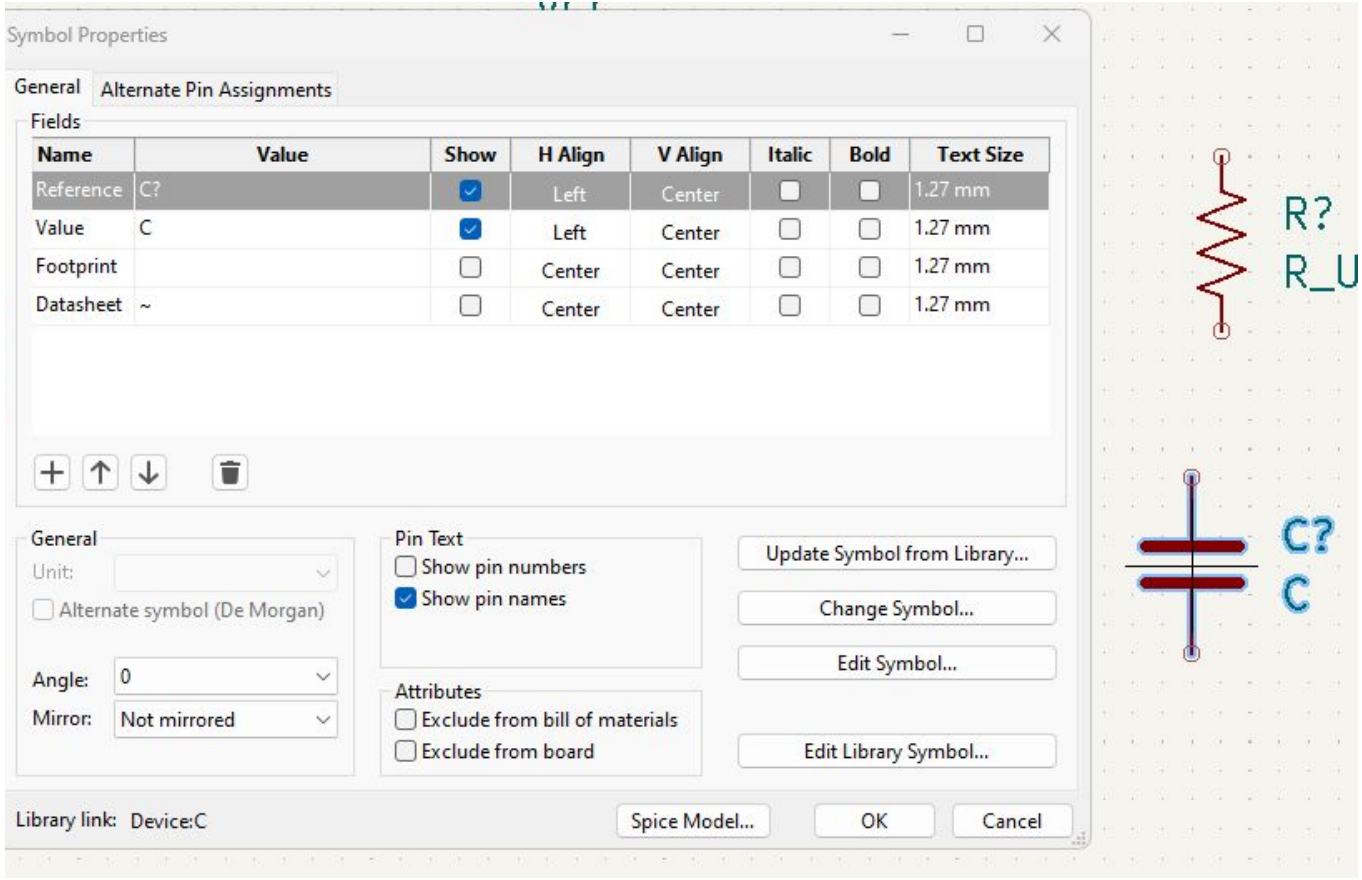

Assigning Component Footprints

- Resistors, capacitors, inductors, and other components can come in many different packages (SMD, THT, etc.)
- We want to assign the symbols a certain footprint so that we can match up a physical component that we have in the lab
- We will use the **Run Footprint Assignment** tool by pressing

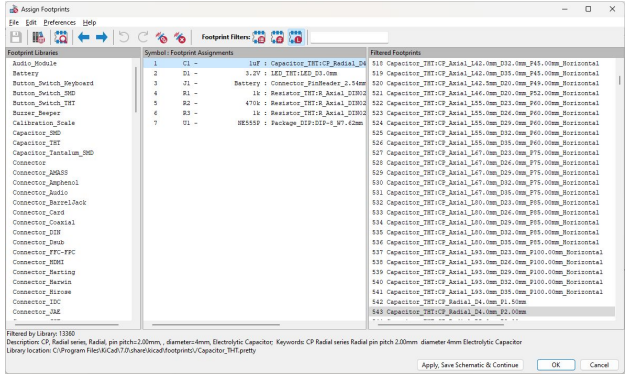

Assigning Component Footprints (Cont'd)

- For the resistors, we will search the **Resistor_THT** library for **R_Axial_DIN0207_L6.3mm_D2.5mm_P7.62mm_Horizontal**
- For the capacitor, we will search the **Capacitor_THT** library for **CP_Radial_D4.0mm_P2.00mm**
- For the LED, we will search the **LED_THT** library for **LED_D3.00mm**
- We are going to use the **Connector_PinHeader_2.54mm** library to find **PinHeader_1x02_P2.54mm_Vertical**

Adding Wires

1. After setting the footprint of one symbol, we can copy it and change the pasted component's value. This way, we won't have to repeatedly search and add the same footprint to each part but instead just use Ctrl+C and Ctrl+V
2. **Do not connect symbols directly into pins**; use wires to connect pins instead
3. Add a wire (**W**) to connect two pins

   Here we have some wire laid:

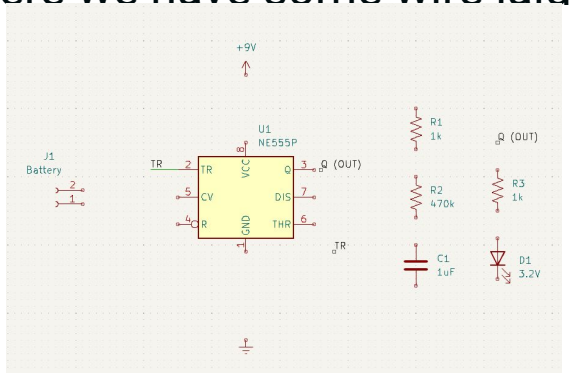

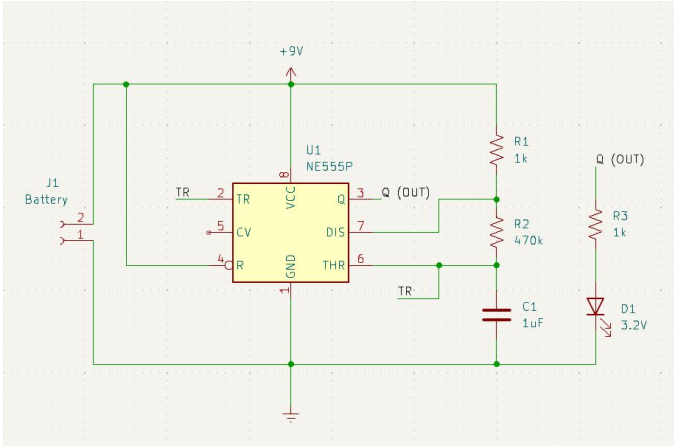

Adding Connections with Labels

Why use labels instead of wires?

- You can’t connect two pins due to wires/components in the way
- For clarity and cleanliness (advised to label most if not all nets/nodes)

How to add a label: Press **L** and put it in a stretch of wire. Then, name it an intuitive name and repeat wherever else you want to connect that point to

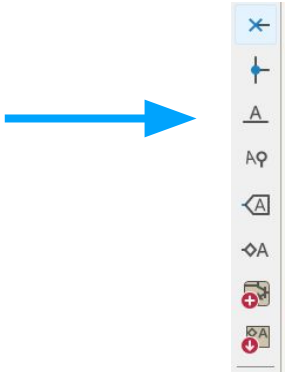

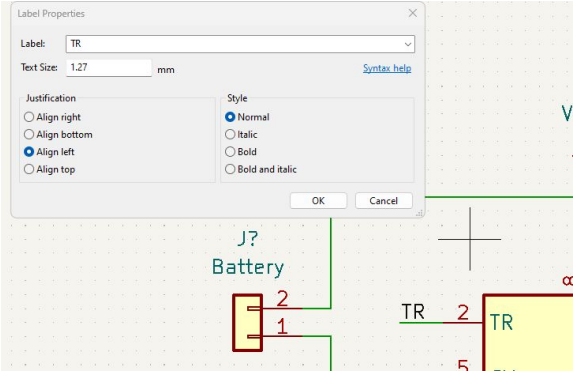

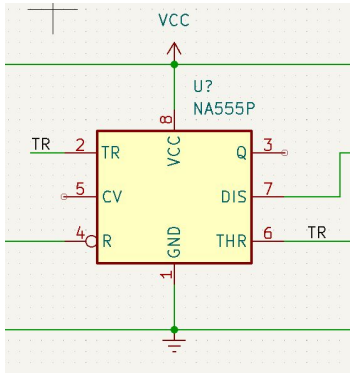

Adding Not-Connected Flags

- Add the no-connection markers for all of the unused pins to complete the schematic
  - Indicates to the PCB editor and to other people that the pin is not meant to be connected to anything
- **How to add a Not-Connected Flags:** Press **Q** or click on the icon you can find on the right of the schematic editor

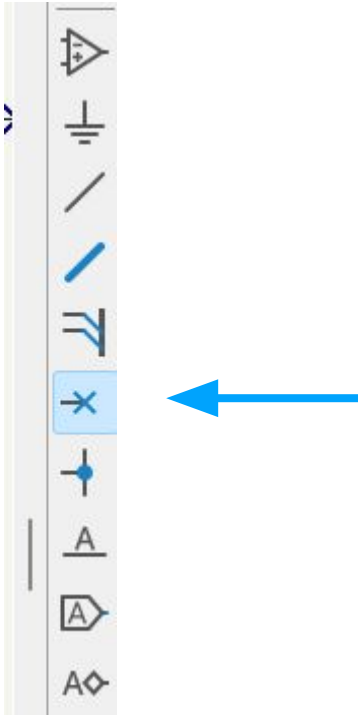

Schematic Verification

Before our Schematic is finished, we have 2 last steps we need to do:

1. **Electronics rules check**
    - Make sure to **run the Electronics Rules Check** (**ERC**) under **Inspect**
    - The only error you should receive is “**Error: Input Power pin not driven by any Output Power pins.**” as we have not connected a specific Input Power Pin
2. **Annotate the schematic**
    - We want to annotate our schematic as well by selecting **Annotate** under **Tools**

Finishing the Schematic

After the no-connect markers are added, the annotation is done, and the ERC run, **the schematic is complete**!

It **does not have to look exactly the same**, as long as the connections are the same.

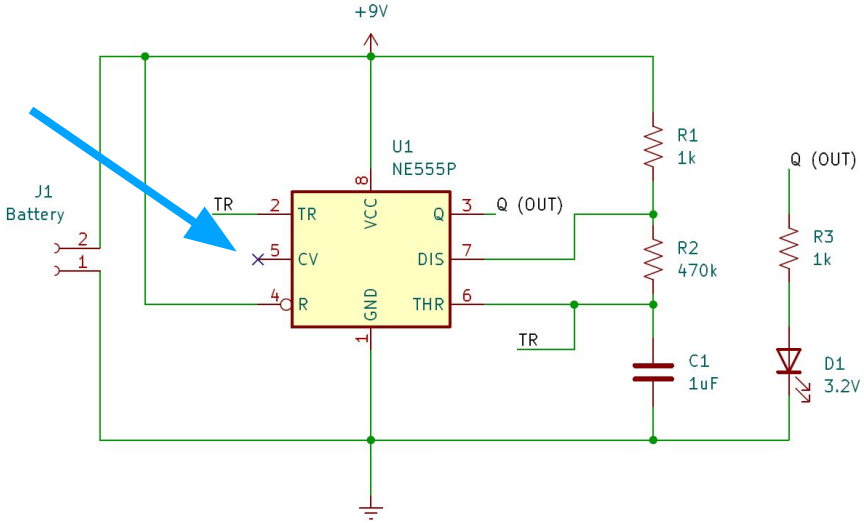

SECTION III

PCB Design

PCB Design Process

1. **Define board outline**
2. **Place components**
3. **Place traces** and **vias**
4. **Add any necessary fills**

PCB Editor

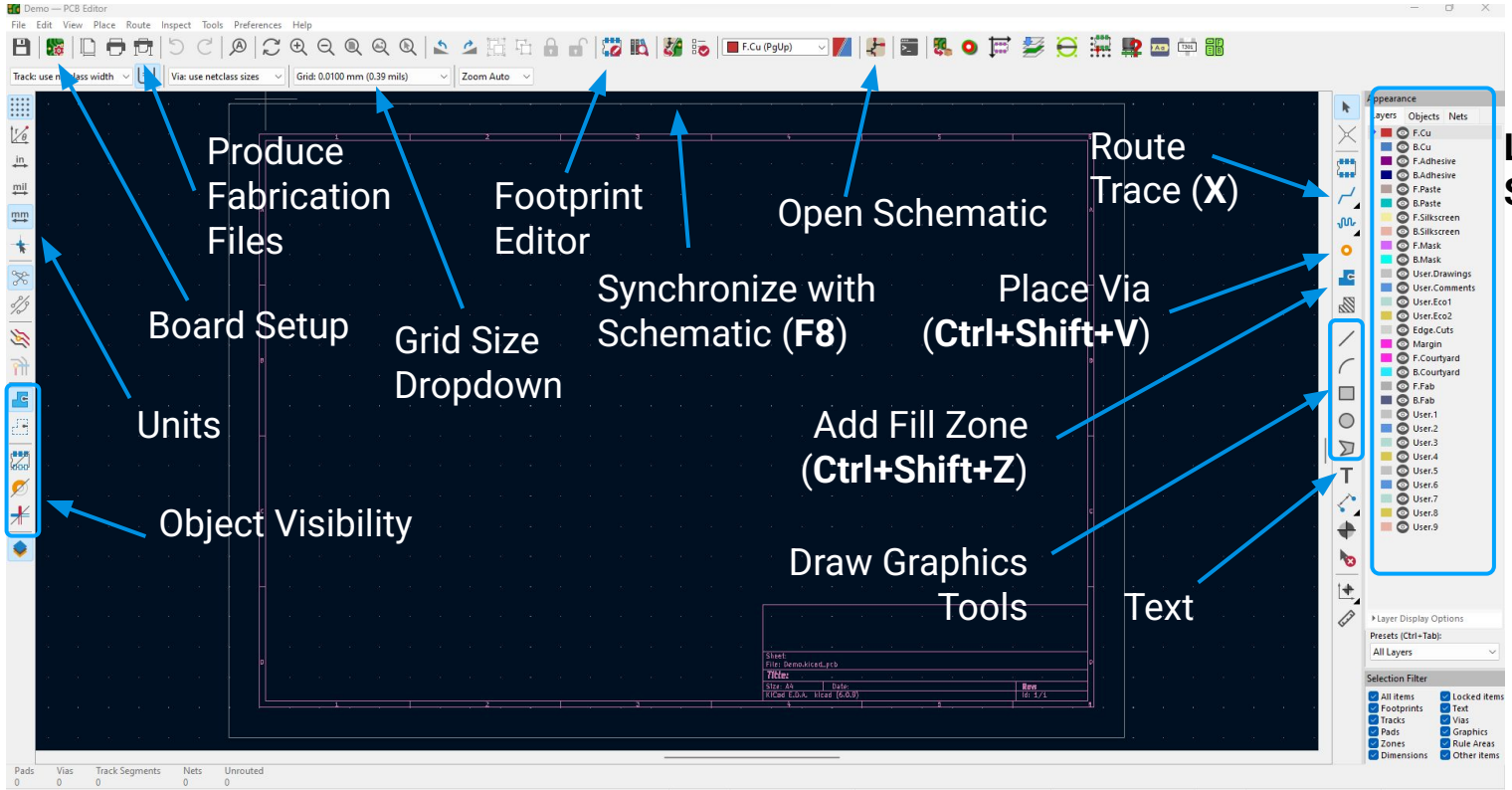
Produce Fabrication Files
Footprint Editor
Open Schematic
Route Trace (X)
Layer Selection
Board Setup
Grid Size Dropdown
Synchronize with Schematic (F8)
Place Via (Ctrl+Shift+V)
Units
Add Fill Zone (Ctrl+Shift+Z)
Object Visibility
Draw Graphics Tools
Text

Important Shortcuts

R - Rotate an Object

X - Create a Trace

W - Increase trace width (predetermined KiCad values unless otherwise modified)

Ctrl/⌘+D - Decrease trace width

V - Switch Layers (Between Top and Bottom Copper), Adds Via if routing a trace

E - Edit Properties

F - Flip (Moves Component from the Top to Bottom or Vice Versa)

D - Drag (Interactive move)

A - Place Footprint

L - Toggle Component Lock

U - Select Trace (from one junction to the next)

M - Move an Object on its own

PCB Layers

- **F/B.Cu** - Top/Bottom Copper layer, where the traces, vias, and fills are
- **F/B.Courtyard** - Defines the area around parts which there can not be other parts on the Copper layers. It represents the physical space a component takes up on the board
- **F/B.Silkscreen** - Graphics that are on top of the solder masks, usually white and can be used for text, annotations, images, etc
- **Edge.Cuts** - Board Outline

PCB Layers (Cont'd)

- **F/B.Mask** - Solder Mask on the Top/Bottom (Where we want to have an opening for the copper, e.g. for pads)
- **F/B.Fab** - Shows the component name and value for components on the Top/Bottom (For Manufacturing)
- **F/B.Adhesive** - Placement Adhesive mapping for the Top/Bottom (Not Important for us)
- **User.Drawings/Comments** - Layers to add dimensions or comments for documentation

Exporting the Schematic to the PCB

1. To add the footprints to the PCB editor, press **F8** or click this icon on the top toolbar
2. Once the dialog pops up: Press **Update PCB**, watch for errors, then press **Close**

   You will see some footprints appear on the PCB like this:

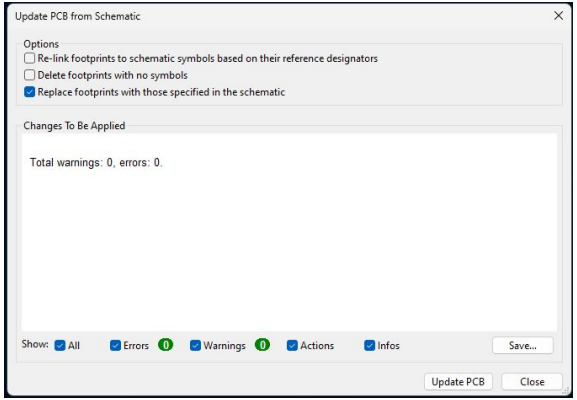

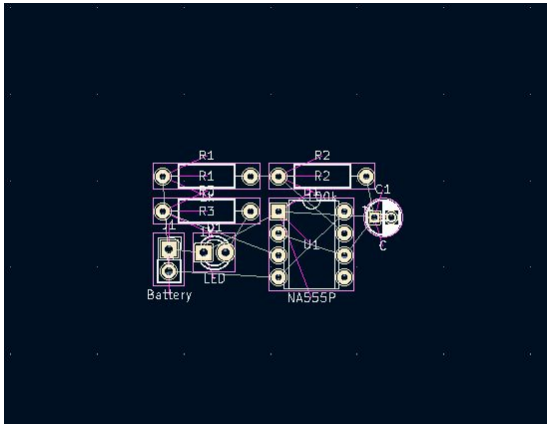

Creating Board Outline

1. Select the **Edge.Cuts** layer by clicking on it; it will be gray once you highlight it
2. **Create a closed graphical shape** in the Edge.Cuts layer (usually a rectangle)
   a. Layer represents the outline/cut-out of the board (any closed shape of any size will do)
   b. It is recommended you create a rectangle or other simple shape:

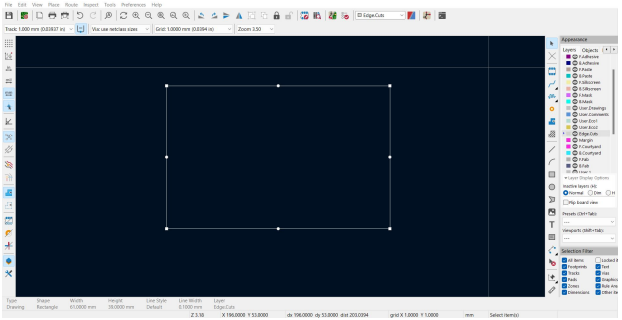

Creating Board Outline (Cont'd)

- Here is a simple rectangle using the rectangle drawing tool; I made sure to leave plenty of space to move footprints/traces around
- You can **make it any shape** using the arc, line, or polygon tools, **as long as it is closed.** If it's not closed, later actions like zone fills will have unintended effects

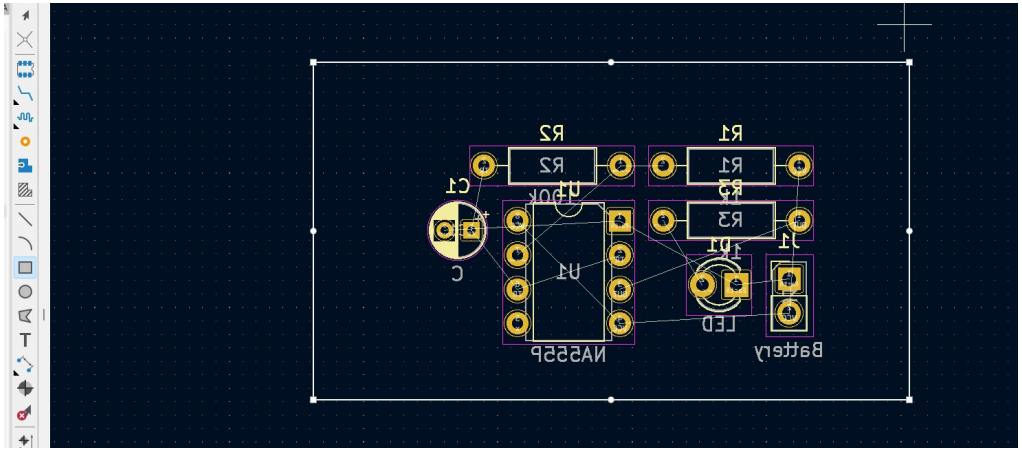

Moving Components to Place

- Move the components so that they can be connected using traces and vias
  - Note: We have two layers of copper and we can use either of them to connect pins
- There will be **little lines or curves connecting one or more pins**, which are called **ratsnest**
  - Indicates which pins need to be connected to one another
- Stay in the outline and not overlap the pink boxes on the outside of the footprints called the **courtyards**

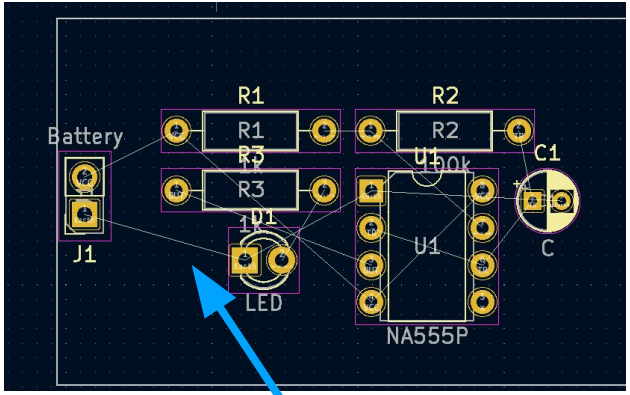

Courtyard **Ratsnest**

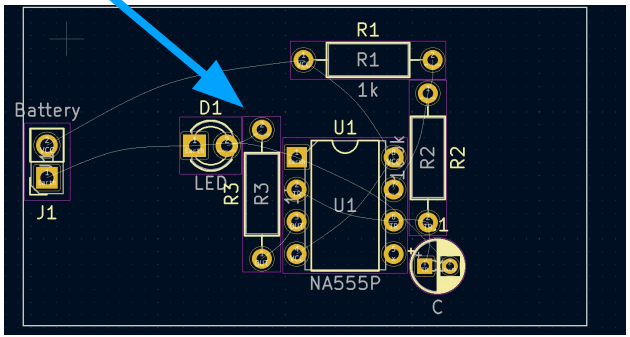

Setting Up Traces and Vias

- We want to **set the size of vias and traces** to adjust resistance
  - The wider the trace the less resistive it is, same with vias.
- We want to make **traces that carry higher current** to be wider
- For data signals the trace size doesn’t matter very much as minimal current is carried
- For our units we will use “**mils**” which stands for **mili-inches**

Setting Up Traces and Vias (Cont'd)

1. We want click on the **via size selection list** or the **track size collection list**
   - From there we will click **Edit predefined sizes**

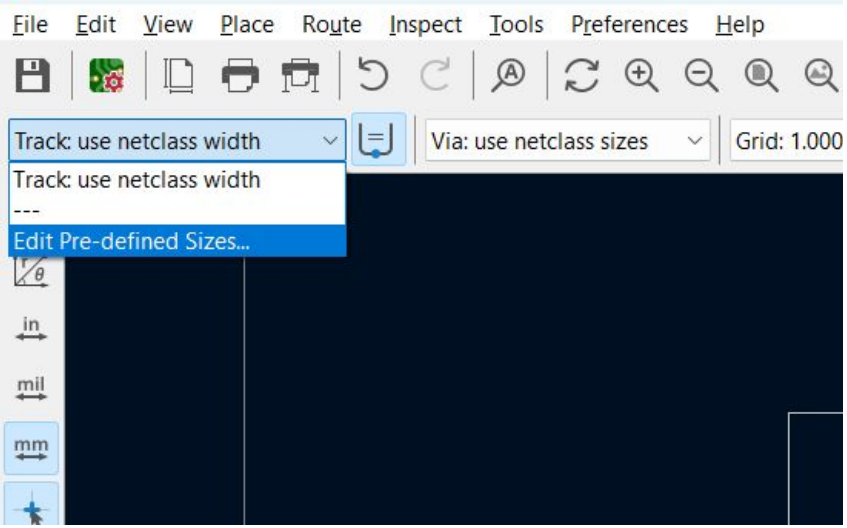

Setting Up Traces and Vias (Cont'd)

2. Press **+** under the Vias table to add a **via diameter** of **30 mils**
    - We want to make the via **hole 20 mils**
3. We want to add 2 **track sizes**: **30 mils** and **40 mils**
4. After, press **OK**

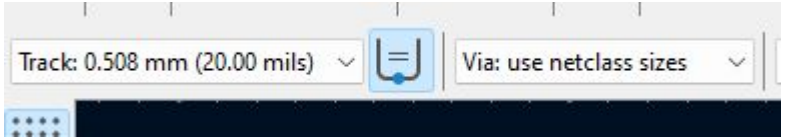

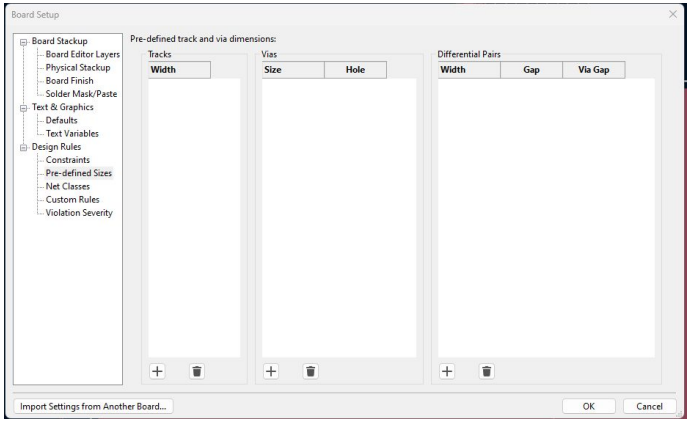

Routing Traces and Vias (Contd)

1. Now we have the track sizes and via sizes set we can start drawing traces. To place a track we need to **select a track size from the drop down menu** mentioned in the slide before:
   a. 40 mils track, 30/20mils Via Size for all **power/ground lines**
   b. 30 mils track, 30/20mils Via Size for all **signal lines**
2. **Deselect** this icon between the track size and via size dropdowns before routing

Routing Traces and Vias (Contd)

1. **Do not wire ground**; we will do that later
2. Click on the **F.Cu layer** in the selecter and **start routing**
   - To draw a track, press **X** while hovering over a pin
   - If you need to make a turn or pivot, click on that pivot point and route from there

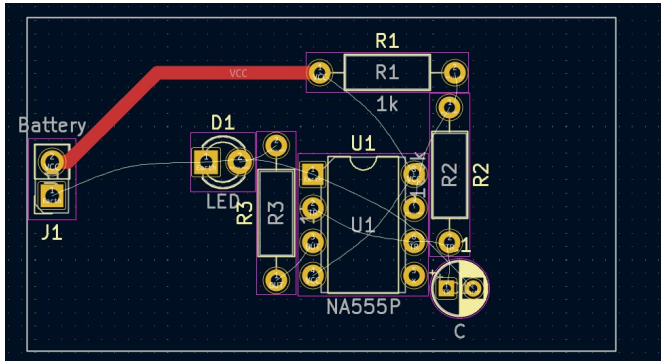

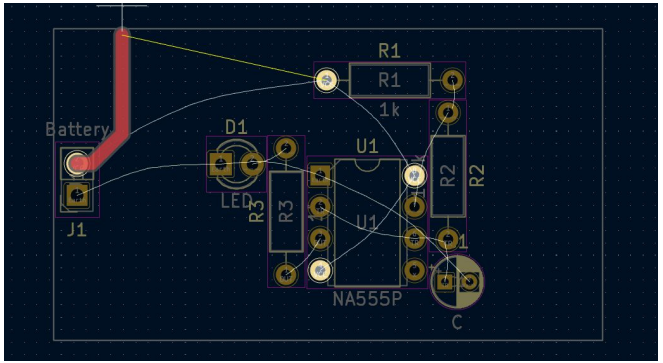

Routing Traces and Vias (Contd)

- If you can't route wires, press **V** while routing and you can use the other layer with a **via**
- When you draw the traces, the color will be blue, indicating you are on another copper layer
- To go back to the first layer, you will need to create another via, and the trace laying should now be red
    - Too many vias on one trace can be detrimental because each via slightly weakens the signal and adds multiple points where things could go wrong

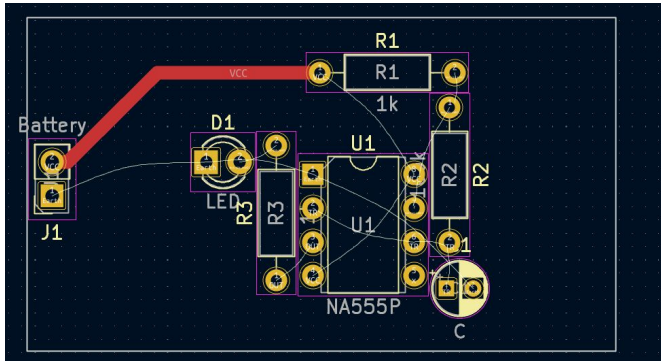

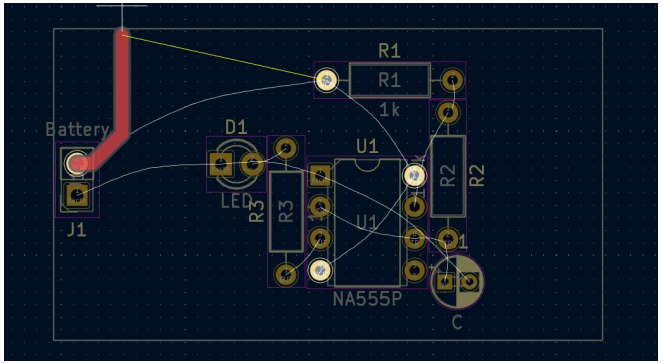

Finishing Routing

- Try and route all of the traces on one layer by making the path from one pin to the next as small as possible
  - The only unrouted net is ground
- Make sure that everything is routed correctly by cross-checking with the datasheets and schematic

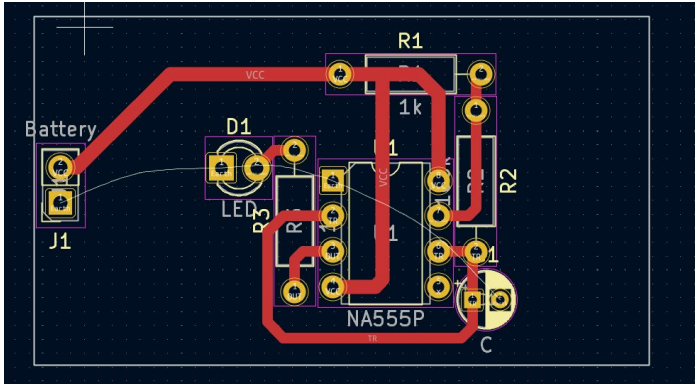

Adding the Ground Fill

- We have left ground unrouted so we can connect it with a fill
- A **fill** is just a large piece of copper that fills all of the gaps in the design and is connected to whatever nets it is assigned to
  - Fills are utilized to **stabilize the ground**, allow for better **current conduction**, as well as allow for **more heat to be dissipated**
- To add a fill we want to select this icon or use **Ctrl+Shift+Z**, we need to be on the **F/B.Cu** layers

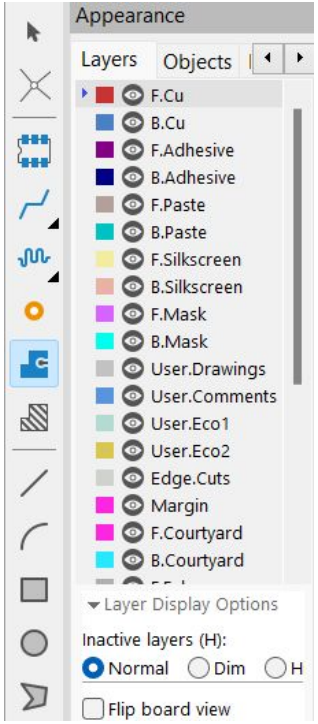

Adding the Ground Fill (Cont'd)

1. Click a point outside of the border, you will get this menu
2. Select the **F.Cu** and **B.Cu** layers
3. Select the **Earth** net as the assigned net
4. Don't touch the rest of the parameters and press **OK**
5. After this, we will move on to drawing the fill

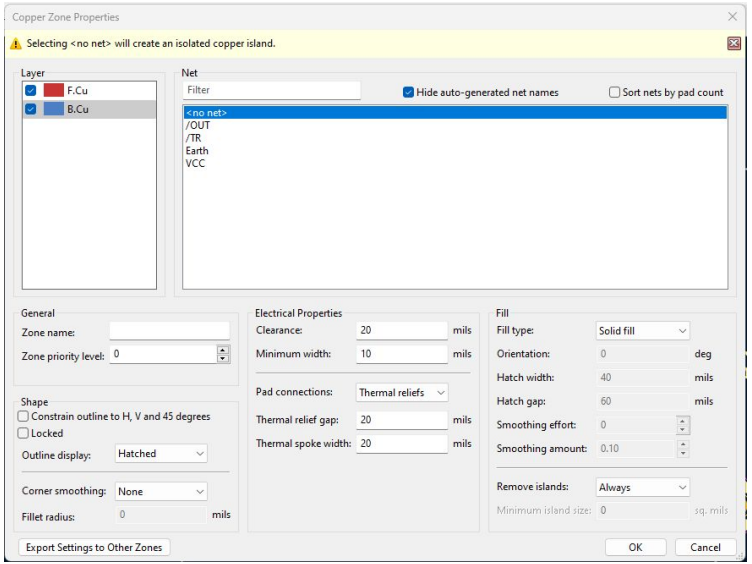

Adding the Ground Fill (Cont'd)

1. Once we have a fill started, draw its border
2. Draw a shape outside of the perimeter enclosing the whole shape/PCB
   a. The border doesn't have to be pretty, just enough to wrap around your entire board
3. After adding all of the corners of the shape close the shape by connecting all four corners
4. Press **B** to make the fill real

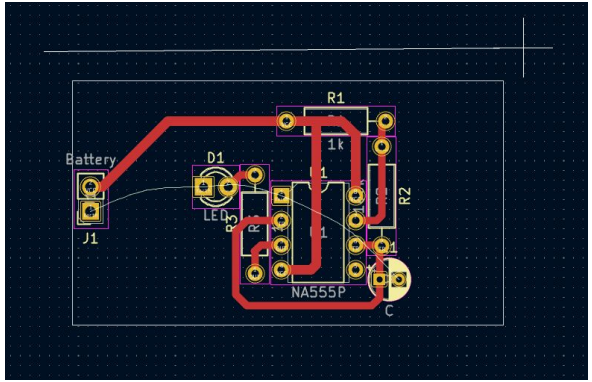

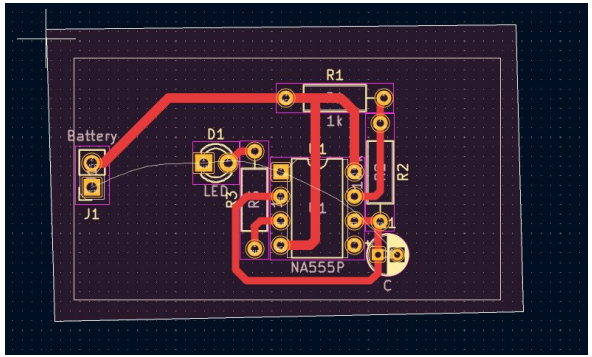

Finishing the PCB

1. Once we have the fill all done there should be no more ratsnest
    - If there are any connections that need to be made, make them
2. We can place a via if there is a void in the fill to fix the void (press **B** after to refill)
3. There is an optional but very helpful step that follows this:

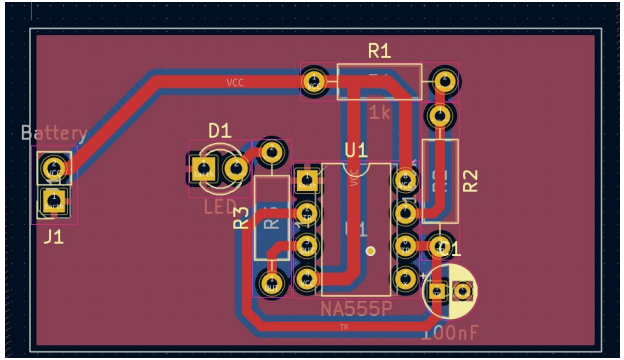

Finishing the PCB (Cont'd)

1. We need to move all of the silkscreen items so that they are easily visible
2. Select the Silkscreen layers and move the text so that it is visible, like this:

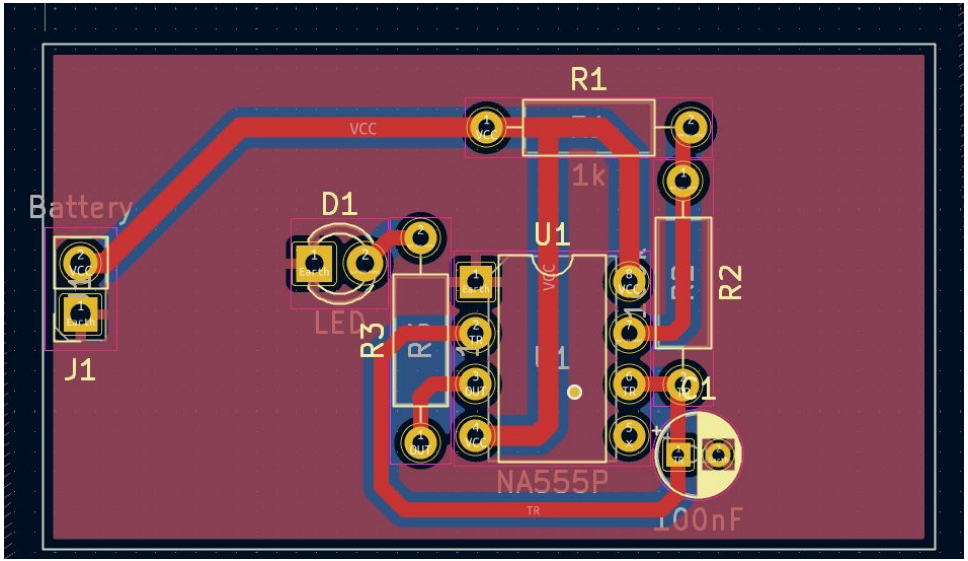

Exporting Manufacturing Files

1. Save the PCB with **Ctrl/⌘+S**

2. We want to press the **Plot** button
   - We will get this dialog

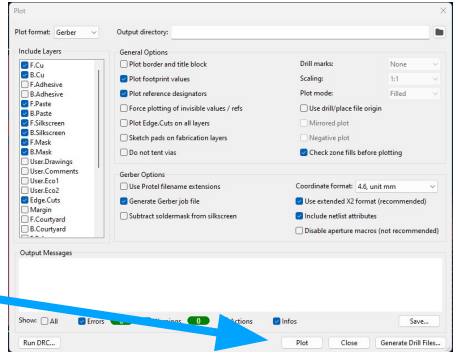

3. Select an output directory and press **Plot**

4. Press **Generate Drill File**

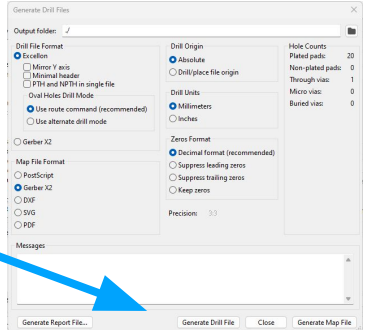

5. **Zip the folder** with the files

6. **Upload the zip** to a Fab

FAIR USE DISCLAIMER

Copyright Disclaimer under section 107 of the Copyright Act 1976, allowance is made for “fair use” for purposes such as criticism, comment, news reporting, teaching, scholarship, education and research.

Fair use is a use permitted by copyright statute that might otherwise be infringing.

Non-profit, educational or personal use tips the balance in favor of fair use.

CC BY-NC-SA 4.0

This work by the Institute of Electrical and Electronics Engineers, UC Irvine Branch, is licensed under CC BY-NC-SA 4.0